Available online at www.sciencedirect.com

SciVerse ScienceDirect

Procedia Engineering 31 (2012) 1211 – 1216

Procedia Engineering

www.elsevier.com/locate/procedia

International Conference on Advances in Computational Modeling and Simulation

Modeling and Simulation of Direct Torque Control Induction Motor Drives via Constant Volt/Hertz Technique

Narongrit Pimkumwong[a*], Amorn Onkrong[a], Tirasak Sapaklom[b]

[a]*Faculty of Engineering, Rajamangala University of Technology Lanna Tak, Tak 63000, Thailand*
[b]*Faculty of Engineering, King Mongkut's University of Technology Thonburi, Bangkok 10140, Thailand*

Abstract

Direct torque control based constant Volt/Hertz technique was the effortless speed control method for the three phase induction motor drives. This method used the stator flux and torque error to generate the stator voltage and frequency reference for controlling the induction motor. The complications of the stator voltage reference calculations were reduced by neglect the stator flux angle and the optimum switching table which were used in the classical direct torque control method. To verify the concept of this control technique, this paper presented its modeling and simulation. The mathematical model which consist of three parts, the three phase induction motor model, the space vector modulation inverter model and the magnitude of the stator flux and torque model, were derived. The overall speed control system was modeled and simulated in MATLAB/Simulink. The simulation results under no load as well as full load identified the obvious validity of the proposed method and its ability could use for three phase induction motor speed control in practice.

© 2011 Published by Elsevier Ltd. Selection and/or peer-review under responsibility of Kunming University of Science and Technology

Keywords: Direct Torque Contorl; Induction Motor Drives; Constant V/F technique

1. Introduction

Three phase squirrel cage induction motors are the most widely used in industry because of their low cost, high efficiency, high robustness, reliability and low maintenance. Nevertheless, they do not have

* Corresponding author. Tel.: +66-55-511-962; fax: +66-55-511-962.
E-mail address: nay_tee2003@hotmail.com.

1877-7058 © 2011 Published by Elsevier Ltd.
doi:10.1016/j.proeng.2012.01.1166

constant speed characteristics when their mechanical loads are changed and do not have capability of variable speed. These limitations can be resolved by using adjustable speed drives. There are many different ways to drive an induction motor such as scalar control, vector control, direct torque control (DTC) and etc. DTC [1] is possible to directly control the stator flux and the torque. Generally, the stator flux and the torque are controlled by selecting the appropriate inverter state. The results obtained previously can be tabulated in the so-called optimum switching table. Its main characteristic is good performance, simpler structure and control diagram. Unfortunately, the selection of the appropriate inverter state from the optimum switching table must know the stator flux angle and the results of the stator flux and torque hysteresis controller. The fluctuation of torque is occurred because the existence of the hysteresis controller. Moreover, the phase locked loop, the full order observer or the other method are used to compute the stator flux angle results in more complexity of computation. DTC based constant Volt/Hertz (V/F) technique is utilized to eliminate the problems mentioned above. This method has simple control structure as classical DTC. It uses the stator flux and torque error to generate the stator voltage and frequency reference instead of the optimum switching table. To verify the concept of this control technique, this paper presented its modeling and simulation. The three phase induction motor mathematical model, the space vector modulation inverter mathematical model and the magnitude of stator flux and torque mathematical model were derived. The overall speed control system was modeled and simulated in MATLAB/Simulink.

Nomenclature

i_{sd}, i_{sq}	d- and q-axis stator current components respectively and expressed in stationary reference frame
L_m	magnetizing inductance
L_s, L_r	self inductance of the stator and rotor respectively
R_s, R_r	resistance of a stator and rotor phase winding respectively
S	slip
T_e, T_l	electromagnetic torque and Load torque reflected on the motor shaft respectively
v_{sd}, v_{sq}	d- and q-axis stator voltage components respectively and expressed in stationary reference frame
$\lvert\vec{v}_s\rvert$	space phasor of the stator voltage expressed in the stationary reference frame
X_{ls}, X_{lr}	leakage reactance of the stator and rotor respectively
$\lambda_{sd}, \lambda_{sq}$	d- and q-axis stator flux components respectively and expressed in stationary reference frame
$\lvert\vec{\lambda}_s\rvert$	space phasor of the stator flux expressed in the stationary reference frame
ω_m, ω_r	mechanical and electrical angular rotor speed respectively
R_s^*	$R_s + L_s R_r / L_r$

σ	$1-L_m^2/L_sL_r$

2. The proposed induction motor drive system

The block diagram of the proposed induction motor drive system is shown in Fig. 1.

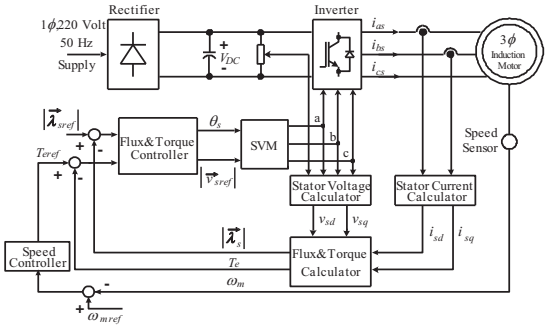

Fig. 1. Block diagram of the proposed drive system

It relies on the principle that the torque and the magnitude of the stator flux are directly proportional with the ratio between the magnitude of the stator voltage and the stator frequency as given in (1) and (2) [2].

$$T_e = \frac{3}{2}\cdot\frac{P}{2}\cdot\frac{|\vec{v}_s|^2}{\pi f}\cdot\frac{Rr/S}{\left(R_s+R_r/S\right)^2+\left(X_{ls}+X_{lr}\right)^2} \tag{1}$$

$$|\vec{\lambda}_s| \approx \frac{|\vec{v}_s|}{2\pi f} \tag{2}$$

To control speed of the motor, the magnitude of the stator voltage is used to control torque because the change of the magnitude of the stator voltage affects the torque more than the magnitude of the stator flux. And the ratio between the magnitude of the stator voltage and the stator frequency is kept constant to control the magnitude of the stator flux constant. Hence, the magnitude of the stator voltage reference obtains from torque controller and the output of the stator flux magnitude controller is the stator frequency or the stator angle –which is integrated stator frequency. The both of these quantities are sent to the space vector modulation (SVM) module to generate the switching pattern for firing the switching devices in inverter.

3. Modeling and simulation of proposed system

In order to verify the proposed drive system, it is required to model the system in terms of its mathematical equations and is simulated in Matlab/Simulink.

3.1. Induction motor mathematical model

Based on the control structure, the three phase squirrel cage induction motor is modeled in the stationary reference frame as follows [1]

$$\frac{d}{dt}\begin{bmatrix} i_{sd} \\ i_{sq} \\ \lambda_{sd} \\ \lambda_{sq} \end{bmatrix} = \begin{bmatrix} -R_s^*/\sigma L_s & -\omega_r & R_r/\sigma L_s L_r & \omega_r/\sigma L_s \\ \omega_r & -R_s^*/\sigma L_s & -\omega_r/\sigma L_s & R_r/\sigma L_s L_r \\ -R_s & 0 & 0 & 0 \\ 0 & -R_s & 0 & 0 \end{bmatrix} \begin{bmatrix} i_{sd} \\ i_{sq} \\ \lambda_{sd} \\ \lambda_{sq} \end{bmatrix} + \begin{bmatrix} 1/\sigma L_s & 0 \\ 0 & 1/\sigma L_s \\ 1 & 0 \\ 0 & 1 \end{bmatrix} \begin{bmatrix} v_{sd} \\ v_{sq} \end{bmatrix} \tag{3}$$

$$T_e = \frac{3}{2} \cdot \frac{P}{2} \cdot \left(\lambda_{sd} \cdot i_{sq} - \lambda_{sq} \cdot i_{sd} \right) \tag{4}$$

$$J_m \frac{d}{dt} \omega_m + D\omega_m = T_e - T_l \tag{5}$$

3.2. Space vector modulation inverter mathematical model

The equations of output phase voltage of inverter which is controlled by space vector modulation are given by [3]

$$v_{ao} = v_{an} + v_{no} \tag{6}$$

$$v_{bo} = v_{bn} + v_{no} \tag{7}$$

$$v_{co} = v_{cn} + v_{no} \tag{8}$$

that

$$v_{no} = \frac{1}{2} median\left(v_{an}, v_{bn}, v_{cn} \right) \tag{9}$$

$$v_{an} = \left| \vec{v}_{sref} \right| cos\left(\theta_s \right), \quad v_{bn} = \left| \vec{v}_{sref} \right| cos\left(\theta_s - \frac{2\pi}{3} \right) \text{ and } v_{cn} = \left| \vec{v}_{sref} \right| cos\left(\theta_s + \frac{2\pi}{3} \right) \tag{10}$$

3.3. Magnitude of stator flux and torque mathematical model

The torque model has been presented in (4). In this section the magnitude of stator flux model is presented. It can be expressed as [1]

$$\left| \vec{\lambda}_s \right| = \sqrt{\left(\lambda_{sd}^2 + \lambda_{sq}^2 \right)} \tag{11}$$

that

$$\lambda_{sd} = \int v_{sd} - R_s i_{sd} \, dt \text{ and } \lambda_{sq} = \int v_{sq} - R_s i_{sq} \, dt \tag{12}$$

3.4. Simulation results

The simulation model of the proposed speed control system is as shown in Fig. 2. [4]

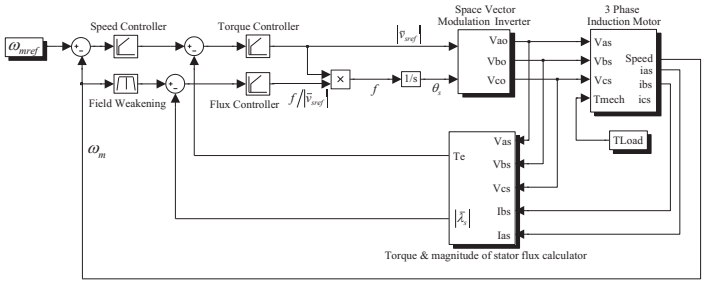

Fig. 2. Simulation model of the proposed drive system

The three phase induction motor parameters for use in Matlab/Simulink model are shown below

Induction motor parameters and specifications:

Voltage	220 V, Delta connected	Current	2.5 A, Delta connected
Power Rating	1 kW	Speed	1500 rpm
Pole	4	R_s	8.96 Ω
R_r	8.22 Ω	L_s	569.32 mH
L_r	569.32 mH	L_m	535.52 mH

The speed response under no-load and full load condition is shown in Fig. 3 (a). It uses time about 0.5 sec to reach reference speed, 1500 rpm. After 0.6 sec, the motor is loaded with rated load, initially the speed drops after that the speed recovers to reference speed suddenly. At 0.8 sec, the motor is unloaded, the speed is almost unchangeable. In Fig. 3 (b), the torque response responds with a short time to arrive rated torque which is demanded by the mechanical load. These results show that the proposed drive system has good and fast response.

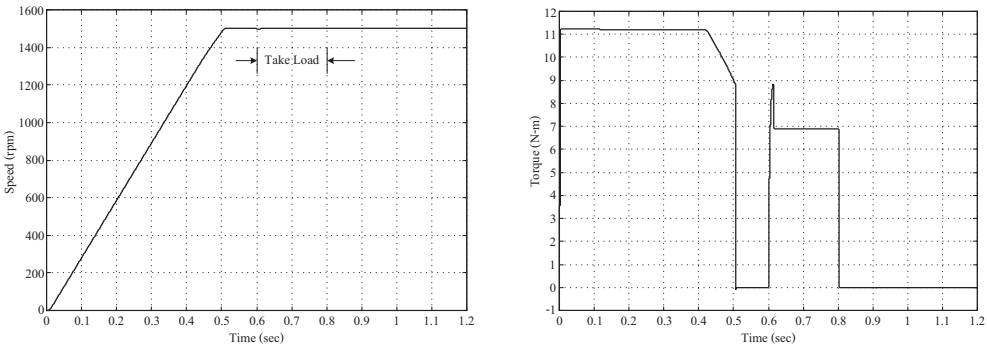

Fig. 3. (a) Speed response under no-load and full load; (b) Torque response under no-load and full load

4. Conclusion

In this paper, the mathematical model of the three phase induction motor, space vector modulation inverter, the magnitude of stator flux and the torque were derived. The proposed drive system was modeled in Matlab/Simulink to verify the concept. The validity of the proposed system was obviously identified by investigation from the simulation results which showed the good and fast response.

References

[1] Peter Vas. *Sensorless Vector and Direct Torque Control*. New York: Oxford University Press; 1998.

[2] Andrzej M. Trzynadlowski. *Control of Induction Motors*. San Diego: Academic Press; 2001.

[3] Arulmozhiyal R, Baskaran K. Space Vector Pulse Width Modulation Based Speed Control of Induction Motor using Fuzzy PI Controller. *International Journal of Computer and Electrical Engineering* 2009; **1**:98-103

[4] Chee-Mun Ong. *Dynamic Simulation of Electric Machinery Using Matlab/Simulink*. New Jersey: Prentice Hall; 1997.