Simulation Analysis of Modified DC Bus Voltage Control Algorithm for Power Quality Improvement on Distributed Generation Systems

Aiswarya.M, Ilango.K and Manitha P.V
Department of electrical and Electronics Engineering
Amrita Vishwa Vidyapeetham
Amrita School of Engineering (Bengaluru campus)
Bengaluru, Karnataka 560035, India.
achu.kuchu@gmail.com, kilango2002@gmail.com, manithapv@gmail.com

Manjula G Nair
Department of Electrical and Electronics Engineering
Amrita Vishwa Vidyapeetham,
Amrita School of Engineering (Amritapuri campus)
Kollam, Kerala, India.
cp.manju @gmail.com

***Abstract*— This paper presents a control strategy for shunt active filter interface for distributed generation scheme without degrading the power quality in the grid. The control strategy used enhances the performance of shunt active filter by sharing active power being generated from distributed generation to grid as well as load in addition to regular functions such as current harmonic elimination, reactive power compensation, power factor correction. The modified control algorithm is designed and analyzed for non-linear load using MATLAB/Simulink. The simulation results shows good performance of controller for power quality improvement of distributed generation system interfaced through shunt active filter.**

Keywords—Distributed Generation (DG); Power Quality improvement; Shunt Active Filter Interface; non-linear load.

I. INTRODUCTION

The non renewable energy which is diminishing at faster rate has made renewable energy as the future source of energy. There are numerous advantages of using renewable energy based generation schemes such as development of clean energy, decrease in global warming etc. But on the other hand, renewable sources of energy are intermittent in nature, when it's directly interconnected to the grid causes many power quality issues such as harmonics, voltage sags, interruption etc [3].The distributed generation schemes are widely uses power electronic interface for grid connections, because of its fast response, harmonic compensation and reactive power compensation. The power quality problems in distributed generation can be solved by numerous compensation techniques such as of passive filters, active filters and hybrid filters. The shunt passive filter acts as a current acceptor by providing low impedance path for the tuned harmonic frequency. Thus it eliminates current harmonics. The series passive filter provides high impedance path for the tuned harmonic frequency, so it eliminates the voltage harmonics. The main drawback of passive filter is that it provides only fixed compensation [4].

The active filters can also be used for power quality improvement which consist of power switching device normally a voltage source inverter or current source inverter with a passive element to store energy such as capacitors and inductors [4-5]. The active filters will provide reactive power compensation, harmonic compensation, balance in three phase supply etc [6]. The active filters are designed to provide the necessary compensation required by the load, which are driven by proper control algorithm. Many control algorithms have been reported in literatures to generate reference compensation current for shunt active filter [1], [5], and [7-9].

In this paper modified DC bus voltage control algorithm is used for the shunt active filter interface of distributed generation scheme which is capable of doing current harmonic elimination, reactive power compensation, power factor correction along with control over real power flow from grid to load. The designed controller has control on real power flow from grid and hence enhances contribution of distributed generation scheme.

II. SYSTEM DESCRIPTIONS

The test system consists of distributed generation scheme which is interfaced through shunt active filter with three phase grid as shown in Fig .1. The shunt active filter is the key element of the distributed power generation system as it interfaces for renewable energy source and the grid which delivers generated power to the grid as well as load. The output of distributed power generation is connected to shunt active filter through a DC link which is regulated and power conditioned by converters. The shunt active filter is driven by modified dc bus voltage control algorithm which provides necessary control pulses to provide current harmonic compensation, reactive power compensation and power factor correction and also control the active power flow from the supply to load. The main advantage of proposed approach is to regulate the power at PCC.

When there is no power generation from distributed power generation scheme, it results in active power filtering mode of operation. In this mode, the shunt active filter provides harmonic compensation and reactive power compensation. So highly unbalanced load currents after compensation appear as pure sinusoidal balanced currents on grid side. In the active

978-1-4799-3421-8/14/$31.00 ©2014 IEEE

power filtering mode of operation, the inverter consumes a small amount of active power to maintain the dc-link voltage and to overcome the losses associated with filter unit.

When there is power generation from distributed power generation scheme i.e. power sharing mode, the modified dc bus algorithm controls the active power flow from the supply side (grid). This control of real power flow is enhanced based on the availability of power generation from the distributed power generation scheme; the load factor value is fixed between zero to one. For example, if the load factor is fixed at 0.5, only half of the active power supplied from grid to load and rest half of active power is provided by the distributed power generation scheme to load. In this mode of operation, the shunt active filter is performing its normal filtering action such as current harmonic compensation, reactive power compensation along with real power sharing from the distributed power generation scheme.

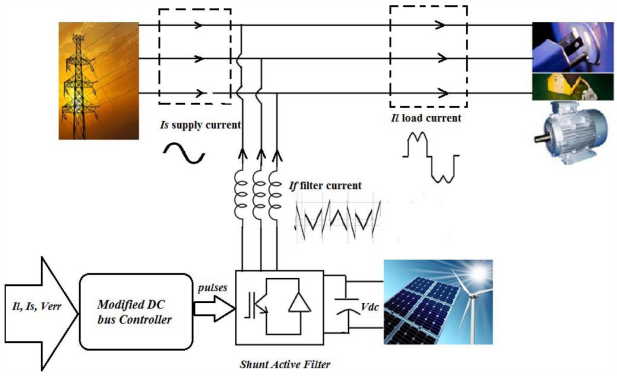

Fig.1 Distributed Generation Interface using Shunt Active Filter

III. CONTROL ALGORITHM

The control is done based on modified dc bus voltage algorithm. In this dc link voltage carries information regarding the exchange of active power between grid and distributed generation scheme. Thus the output of dc-link voltage regulator results in an active current (I_m). DC voltage regulator gives the active current element (I_m). Multiplication of I_m with unit vector templates gives reference grid currents (I_a*,I_b*,I_c*).

$$I_a^*=k*I_m*U_a \quad (1)$$

$$I_b^*=k*I_m*U_b \quad (2)$$

$$I_c^*=k*I_m*U_c \quad (3)$$

Unit vector templates are obtained using voltage sensors (U_a,U_b,U_c)

$$U_a=\text{Sin } wt \quad (4)$$

$$U_b=\text{Sin } (wt\text{-}120) \quad (5)$$

$$U_c=\text{Sin } (wt\text{+}120) \quad (6)$$

The reference source (grid) currents are subtracted from actual load currents to generate filter reference current. The error of actual filter current and reference filter current is given to hysteresis controller which generates required switching pulses for the shunt active filter. The modified DC bus voltage control algorithm is represented in Fig.2.

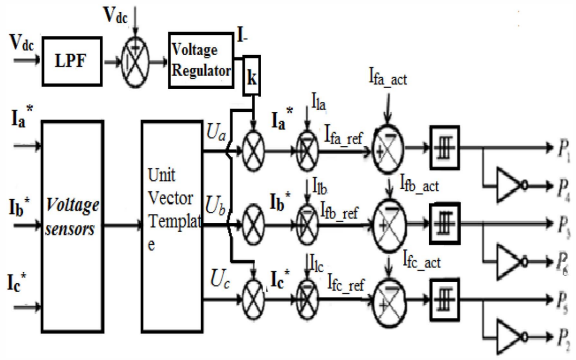

Fig.2 Block diagram representation of proposed control algorithm

IV. SIMULATION ANALYSIS

A 3phase balanced AC source of 415V, 50Hz is supplying non-linear load of diode bridge rectifier with RL load (R= 58.5Ω, L= 1mH). The output of distributed power generation scheme is considered as regulated dc source which is interfaced through a shunt active filter. The shunt active filter is controlled by proposed modified DC bus voltage control algorithm to obtain pure sinusoidal source current under highly non linear load condition.

Initially the test system is analyzed without the grid interfacing shunt active filter i.e. balanced source supplying non-linear load of diode bridge rectifier with RL load. The voltage and current of both source side and load side for three phase test system are presented in Fig 3 and Fig.4. Its observed that the supply current has become non sinusoidal with magnitude of 10A ,due to the harmonic and reactive component of the current drawn by the nonlinear load apart from the active component of the current required by it.

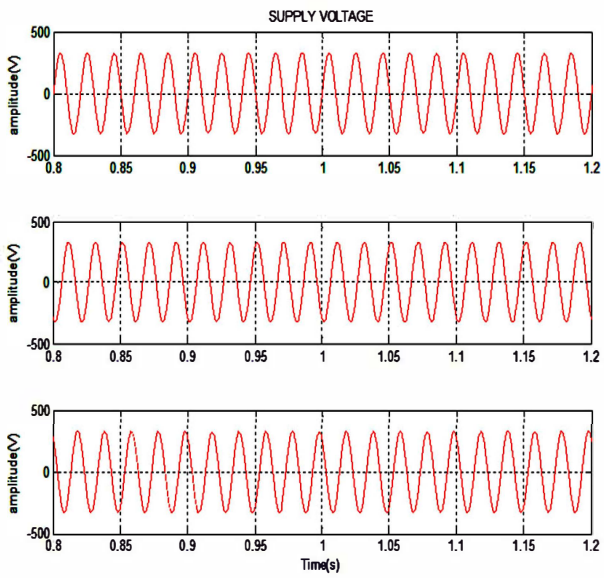

Fig. 3(a) supply voltage

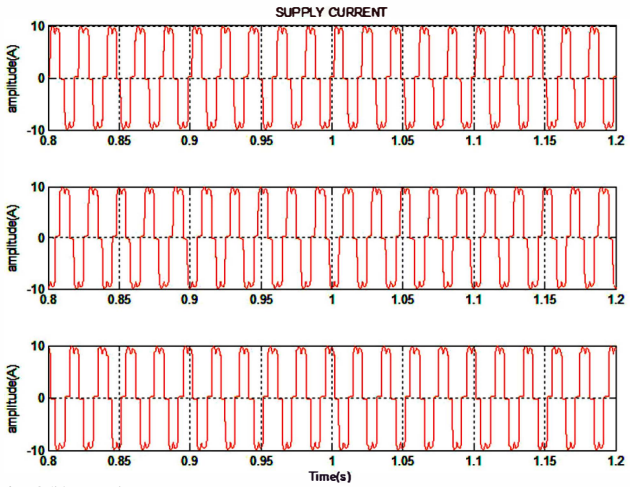

Fig. 3(b) supply current

Fig 3(a) and Fig 3(b) shows the supply voltage and current.

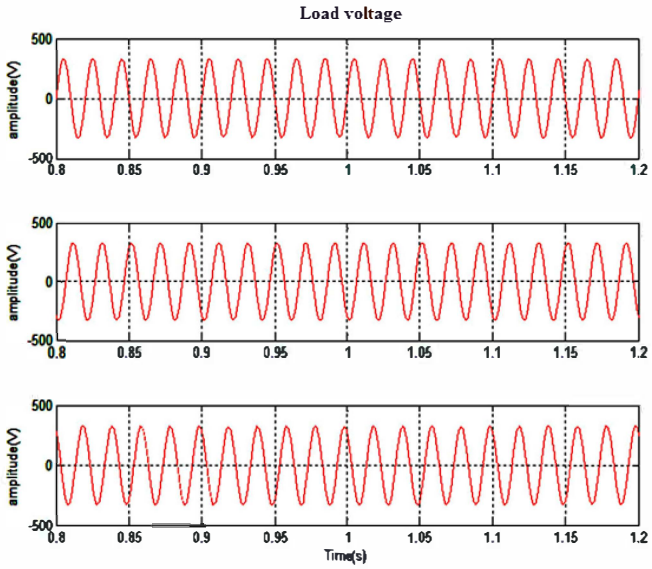

Fig. 4(a) Load voltage

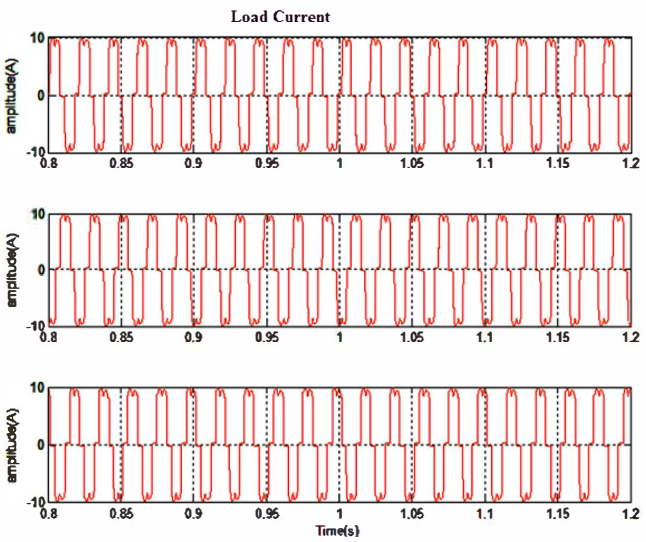

Fig. 4(b) Load current

Fig.4(a) and Fig. 4(b) shows load voltage and load current respectively. The distributed power generation scheme is connected to the grid - load system through shunt active filter later. The modified dc bus voltage controller is implemented for providing control pulses to shunt active filter so that it can provide harmonic and reactive power compensation. The controller controls the shunt active filter in such a way that the current harmonic elimination and reactive power compensation is provided by filter itself thereby the supply current remains sinusoidal always. It also controls the active power flow from the source to load hence part of active power is shared from the distributed power generation scheme.

The controller senses the source current, dc bus voltage V_{dc}, filter currents. The supply must be always provide only active component of power, the reactive component as well as harmonic component required by the load should be supplied by the shunt active filter. The V_{dc} and V_{ref} are given as input to comparator to get the error which is given to the voltage regulator to get the active component of current I_m. The active current is multiplied by load factor which decides the desired mains current amplitude. It is again multiplied with unit sine wave to get reference source current. The reference filter current is obtained by subtracting reference source current from load current. The difference of reference filter current and actual filter current is given to the hysteresis controller to generate necessary control pulses for the switches of shunt active filter. The simulation validation of the proposed control algorithm is shown in Fig.5, Fig.6 and Fig.7. It represents the individual phase load current, reference current generated by controller, actual filter current and source current.

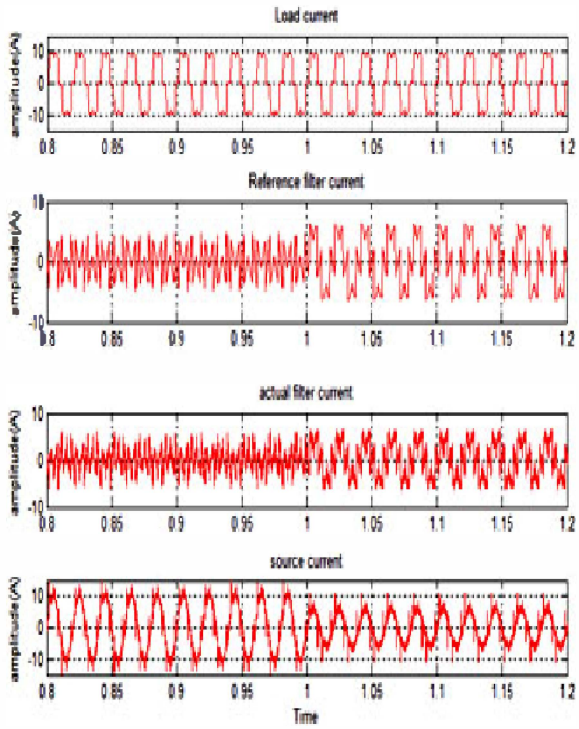

Fig.5 Phase A load current, reference filter current, actual filter current and compensated supply current

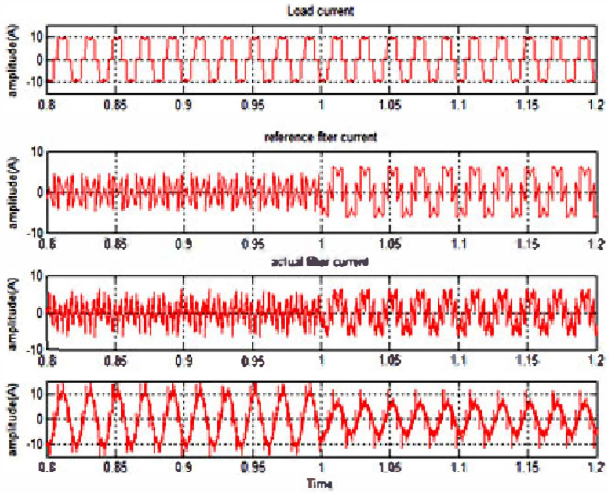

Fig.6 Phase B load current, reference filter current, actual filter current and compensated supply current

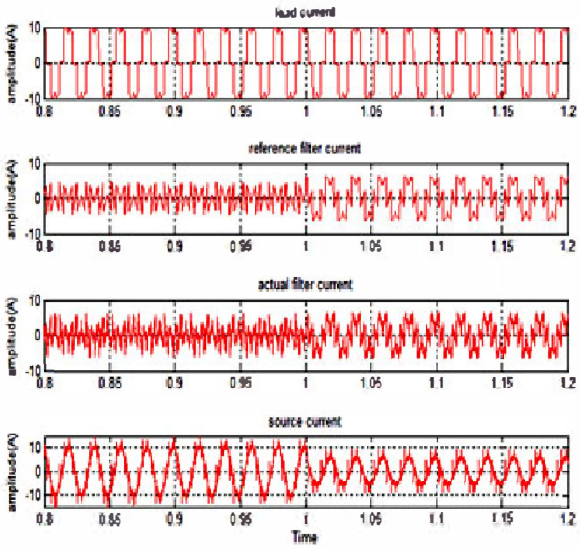

Fig.7 Phase C load current, reference filter current, actual filter current and compensated supply current

From Fig.5, Fig.6, and Fig.7, its clear that modified dc bus algorithm provides effective control to shunt active filter interface for distributed power generation scheme. The current harmonics are eliminated from source current thereby it maintains sinusoidal source current.

The active power sharing can be also observed from the Fig.5, Fig.6 and Fig.7. For the time period of t= 0-1s, the load factor is fixed as 1 under this condition the system operates in active filtering mode i.e total real power requirement 5 kW is met by source and shunt active filter is doing the work of current harmonic elimination, reactive power compensation and power factor correction. For the time period of t=1-2s the load factor is changed to 0.5, hence supply current is reduced to half i.e. half of the active power is provided by supply and rest half of active power is met from distributed power generation scheme. The THD is also reduced in source current which has become almost sinusoidal. The power sharing between source and distributed power generation scheme is given in Table. I.

TABLE I. POWER SHARING BETWEEN GRID AND DISTRIBUTED GENERATION

L.F	Power sharing between source and distributed generation to load		
	Source Power Ps(W)	Distributed Power Generation via Shunt Active Filter P_f (W)	Load Power P_L (W)
1	5332	-300	5035
3/4	4400	614	5035
1/2	3000	2025	5035
1/4	1896	3136	5035

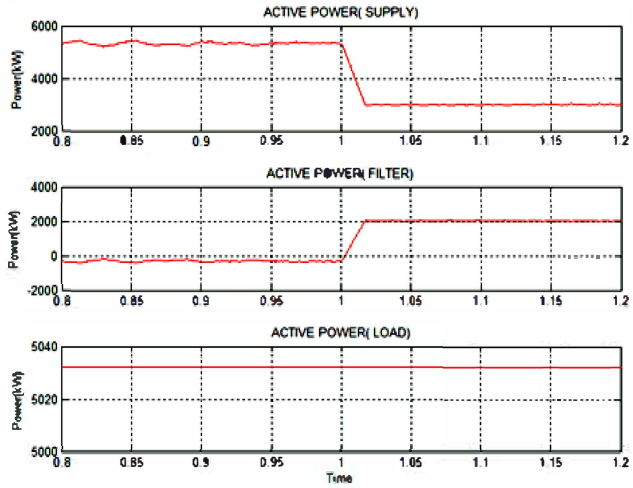

Fig 8 Power sharing of source and distributed power generation scheme

Fig.8 shows the power sharing of source and distributed power generation scheme through shunt active filter interface.

It is observed that after 1sec there is a change in active power flow in filter side and supply side. Before 1 sec the source supplies total active power demanded by load and the shunt active power filter provides the current harmonic compensation, reactive power compensation by supplying total Var requirement of load. After 1 sec, the shunt active filter supplies 2025W of power required by load and rest of the active power is supplied from the source. Thus active power control is achieved from the proposed controller.

The power factor correction and harmonic compensation and reactive power compensation is also obtained using modified dc bus voltage algorithm. Fig.9 shows the source voltage and source current after compensation thus supply current(grid) has become sinusoidal and is inphase with the supply voltage. Thus the power factor correction can also be achieved using this algotithm. Hence the power quality can be improved in the

supply line even under when a distributed renewable source is connected to the line at PCC.

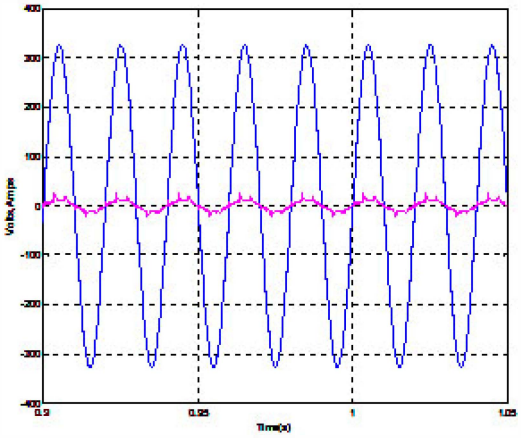

Fig.9 Supply voltage and current after compensation for phase 'A' alone

V. CONCLUSION

This paper presented a modified control of shunt active filter used for grid interfacing of distributed power generation scheme. The shunt active filter provides current harmonic elimination and reactive power compensation. In addition to its function as a filter it works as an interface between distributed power generation scheme and grid by injecting the real power produced by renewable energy source to grid as well as load. The performances of the proposed control algorithm have been validated using MATLAB/SIMULINK. The simulation results demonstrates that after compensation the supply current is becoming sinusoidal and active power required by the load is shared by both grid and distributed power generation scheme.

REFERENCES

[1] J.H.L Jou,"*Performance comparison of three phase active power filter algorithms*," IEEE Proceedings online no.19952247 Taiwan,1995.

[2] Ambrish Chandra, Bhim Singh, B. N. Singh, and Kamal Al-Haddad," *An Improved Control Algorithm of Shunt Active Filter for Voltage Regulation, Harmonic Elimination, Power- Factor Correction, and Balancing of Nonlinear Loads,*" IEEE transactions on Power electronics, vol. 15, no. 3, May 2000.

[3] J. H. R. Enslin and P. J. M. Heskes, "*Harmonic interaction between a large number of distributed power inverters and the distribution network,"IEEE Trans. Power Electron., vol. 19, no. 6, pp. 1586–1593,*Nov. 2004.

[4] Benjamin Kroposki,Christopher Pink,Richard DeBlasio, Holly Thomas,Marcelo Simoes,and P.K. Sen" *Benefits of Power Electronic Interfaces for Distributed Energy Systems" IEEE .Trans. Power Del, vol. 26, no. 1*, Jan 2006.

[5] J. P. Pinto, R. Pregitzer, L. F. C. Monteiro, and J. L. Afonso, "*3-phase 4-wire shunt active power filter with renewable energy interface,*" presented at the Conf. *IEEE Renewable Energy & Power Quality*, Seville, Spain, 2007.

[6] M. Singh and A. Chandra, "*Power maximization and voltage sag/swell ride-through capability of PMSG based variable speed wind energy conversion system,*" in *Proc. IEEE 34th Annu. Conf. Indus. Electron. Soc., 2008, pp. 2206–2211.*

[7] Mukhtiar Singh, Vinod Khadkikar, Ambrish Chandra, and Rajiv K. Varma, "*Grid Interconnection of Renewable Energy Sources at the Distribution Level With Power-Quality Improvement Features*" *IEEE Trans. Power Del,* vol. 26, no. 1, Jan 2011 .

[8] S. Bhattacharya, D. M Divan and B.Bhanerjee," *Synchronous Frame harmonic isolator using Active series filter".* EPE.9,1991.

[9] G.Bhuvaneshwari, Manjula G Nair, "*Design, Simulation and Analog Circuit Implementation of a three-phase Shunt Active Filter Using Icosø Algorithm",* IEEE Transactions on Power Delivery April 2008.