Direct Torque Control of Two-Phase Induction Motors Fed by Two- and Three-leg Inverters

Y. Sangsefidi, S. Ziaeinejad, A. Shoulaie
Electrical Engineering Department
Iran University of Science and Technology, Tehran, Iran
y_sangsefidi@elec.iust.ac.ir, s_ziaeinejad@elec.iust.ac.ir, shoulaie@iust.ac.ir

***Abstract*— In this paper, direct torque control of two-phase induction motors fed by two- and three-leg inverters is analyzed. Essential equations for controlling electromagnetic torque and stator flux are presented and switching tables are derived. It's demonstrated that basic method is unable to control the electromagnetic torque properly. The way of changing the switching table for improving torque control is presented. Simulation results, confirm the effectiveness of modified direct torque control of two-phase induction motors.**

***Keywords*—two-phase induction motor, two-leg inverter, three-leg inverter, direct torque control, modified switching table**

I. INTRODUCTION

In many household products and also in many low power industrial applications, variable speed performance is needed. The need for variable speed together with concerns about total cost and efficiency has made low-cost drive systems used in low-power applications [1]. Though due to some advantages (such as high torque density, high torque to current ratio and simplicity of control) permanent magnet motor drives have been utilized in many low-power applications and household products [2], single phase induction motors are still pioneers in low-power industrial and domestic applications because of some features such as low cost, simple and robust structure and capability to work when fed by a single phase power supply [3], [4].

Single phase induction motor is an asymmetrical two-phase induction motor including the main and the auxiliary windings that are placed with 90° difference with each other. Three common types of single-phase induction motors are split phase, capacitor-start and capacitor-run motors [5].

In both split-phase and capacitor-start single phase motors, variable speed drive is practically inaccessible as in low speed operation, the centrifugal switch doesn't disconnect the auxiliary winding and due to the fact that the auxiliary winding is designed to be connected in only starting conditions, it cannot tolerate steady state current and will be damaged.

In capacitor-run single phase motors, the number of turns of the auxiliary winding is more than that of the main winding and so a higher supply voltage is needed for it. The capacitor is in series with the auxiliary winding and is connected in circuit in both starting and steady state conditions [4],[6].

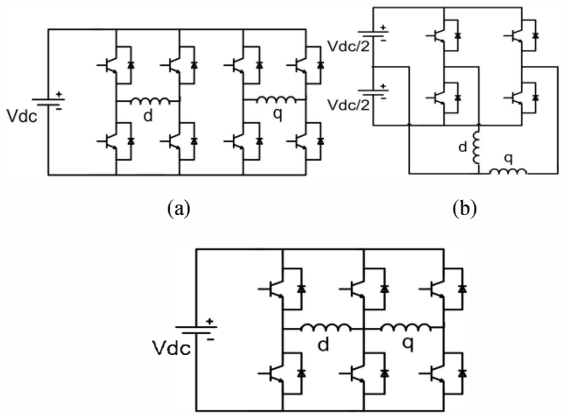

Figure 1. Different inverter topologies used in two-phase induction motor drives (a) four-leg inverter (b) two-leg inverter (c) three-leg inverter

By using an appropriate capacitor, the magnetomotive forces of two motor windings become identical and torque ripple will be suppressed. The appropriate capacitance depends on the conditions of power supply and mechanical load. So, in variable speed application, torque ripple is a constant problem. Moreover, operation of capacitor-run single phase induction motors at low speed can cause some problems such as over temperature, decreased pull-down torque and increased torque ripple [6].

It's possible to overcome aforementioned problems by utilizing three-leg inverter and using both motor windings. Difficulty of this method is that the voltage of the auxiliary winding should be higher than that of the main winding. In nominal conditions, achieving a higher voltage requires using boost converters or placing a capacitor in series with the auxiliary winding [4]. Using either of these approaches leads to an increased cost and opposes the purpose of cost reduction. Therefore, the best method is speed control of symmetrical two-phase induction motors.

Different inverter topologies have been proposed for two-phase induction motor drives. Common topologies are shown in Fig. 1 [7],[8]. Although the first topology introduces good performance, it opposes the purpose of cost reduction because of using 8 switches. In the second topology, the performance is weak, but due to utilizing only 4 switches it is a low-cost solution. Two-leg inverter is applicable in applications in which two power supplies are available. If two power supplies are not available, utilizing

this scheme needs not only two capacitor with high capacitance but also a charge equalizing circuit that make the use of three-leg inverters justifiable [7],[9].

Although high performance methods such as field-oriented control (FOC) and direct torque control (DTC) of three-phase induction motors have been thoroughly discussed, these methods have not been thoroughly developed for two-phase induction motors [10]. Nevertheless, when good performance of the motor drive is expected, the use of high-performance methods is inevitable. Field-oriented control of two-phase induction motors has been proposed in [11]. Using a position sensor in FOC methods leads to enhanced cost and reduced reliability of the control system. In contrast, DTC method provides good performance of control system without using a speed or position sensor. Utilizing no position sensor has made it a robust and low-cost drive system [12].

In this paper, at first, direct torque control of two-phase induction motor fed by two- and three-leg inverters is proposed based on the method presented in [13]. Then, it is shown that by using these methods, the electromagnetic torque control fails in some regions. Diagnosing these regions is accomplished and modified DTC method for both two- and three-leg inverters is proposed. The proposed method overcomes the problems of the conventional method and is validated by dynamic simulation in Matlab\Simulink.

II. PRINCIPLES OF DIRECT TORQUE CONTROL OF TWO-PHASE INDUCTION MOTORS

For analyzing direct torque control method, on the first place, equations of two-phase induction motor should be studied. It's assumed that air gap length is constant and magnetic circuit is linear. According to [5], (1)-(4) present voltage-current equations of two-phase induction motors in stationary reference frame

$$V_{qs} = r_s i_{qs} + \frac{d}{dt}\lambda_{qs} \tag{1}$$

$$V_{ds} = r_s i_{ds} + \frac{d}{dt}\lambda_{ds} \tag{2}$$

$$0 = r_r' i_{qr}' + \frac{d}{dt}\lambda_{qr}' - \omega_r \lambda_{dr}' \tag{3}$$

$$0 = r_r' i_{dr}' + \frac{d}{dt}\lambda_{dr}' + \omega_r \lambda_{qr}' \tag{4}$$

where r_s and r_r' respectively are the resistance of each phase of stator and rotor, V_{qs} and V_{ds} respectively are stator voltages in q and d axes, i_{qs}, i_{ds}, i_{qr}' and i_{dr}' respectively are stator current in q axis, stator current in d axis, rotor current in q axis and rotor current in d axis. λ_{qs}, λ_{ds}, λ_{qr}' and λ_{dr}' respectively are stator flux in q axis, stator flux in d axis, rotor flux in q axis and rotor flux in d axis. d and q axes are in stationary reference frame. Equations (5)-(7) can be used for diagnosing stator flux.

$$\lambda_{qs} = \int (V_{qs} - r_s \times i_{qs})\, dt \tag{5}$$

$$\lambda_{ds} = \int (V_{ds} - r_s \times i_{ds})\, dt \tag{6}$$

$$|\lambda_s| = \sqrt{\lambda_{qs}^2 + \lambda_{ds}^2} \tag{7}$$

In the model of induction motor, the equations (8) and (9) are established [12].

$$\overline{\lambda_s} = L_s \overline{i_s} + L_m \overline{i_r'} \tag{8}$$

$$\overline{\lambda_r'} = L_r' \overline{i_r'} + L_m \overline{i_s} \tag{9}$$

where L_s, L_r' and L_m respectively are stator inductance, rotor inductance referred to stator winding and magnetizing inductance. $\overline{i_s}$ and $\overline{i_r'}$ respectively are stator current vector and rotor current vector referred to stator winding. Regarding (1)-(9), the electromagnetic torque of motor is

$$T_e = P(\lambda_{ds} i_{qs} - \lambda_{qs} i_{ds}) = P\, \overline{\lambda_s} \times \overline{i_s} \tag{10}$$

(8) and (9) give

$$\overline{i_s} = \frac{1}{L_s'}\overline{\lambda_s} - \frac{L_m}{L_s' L_r'}\overline{\lambda_r'} \tag{11}$$

where

$$L_s' = \left(1 - \frac{L_m^2}{L_s L_r'}\right) L_s \tag{12}$$

(10) and (11) give

$$T_e = P\frac{L_m}{L_s' L_r'}\overline{\lambda_s} \times \overline{\lambda_r'} = P\frac{L_m}{L_s' L_r'}|\lambda_s||\lambda_r'|\sin(\theta_s - \theta_r) \tag{13}$$

where θ_s is the stator flux angle and θ_r is the rotor flux angle. Electrical time constant of the rotor of induction motors is large (about 0.1 s or more[12]) and so the rotor flux doesn't change in a short interval and is assumed to be constant. Therefore, a quick response of electromagnetic torque can be achieved by rotating the voltage vector in a way that θ_s would increase rapidly. In direct torque control method, at each sampling period, according to desired and actual torque and flux, a voltage vector which reduces the errors of torque and flux is selected.

III. DIRECT TORQUE CONTROL OF TWO-PHASE INDUCTION MOTORS FED BY TWO-LEG INVERTER

Direct torque control of a two-phase induction motor supplied by a voltage source with the middle-point and driven by a two-leg inverter is possible. In this section, first, direct torque control of two- phase induction motors fed by two-leg inverters is proposed based on the method presented in [13]. Then, the switching table will be modified to overcome the torque control problem in basic method.

A. Basic DTC method using two-leg inverter

Fig. 2 shows the available voltage vectors and the way to distinguish 4 distinct sectors of the stator flux using a method similar to the method presented in [13].

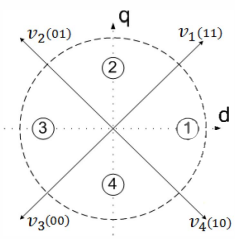

Figure 2. voltage vectors generated by a two-leg inverter and the way of specifying four sectors of the stator flux

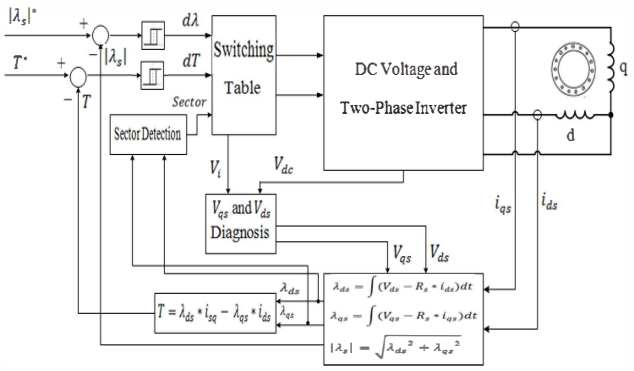

Figure 3. Block diagram of basic DTC method for two-phase induction motor

TABLE I. SELECTION OF VOLTAGE VECTORS IN BASIC DTC METHOD IN TWO-PHASE INDUCTION MOTOR FED BY TWO-LEG INVERTER

		Flux Sector			
$d\lambda$	dT	1	2	3	4
1	1	v_1	v_2	v_3	v_4
	0	v_4	v_1	v_2	v_3
0	1	v_2	v_3	v_4	v_1
	0	v_3	v_4	v_1	v_2

In each of 4 sectors presented in Fig. 2, at each sampling period, the modulus of stator flux is calculated according to (5)-(7) and the electromagnetic torque is calculated from (10). Calculated values of stator flux and electromagnetic torque are compared with desired values and voltage vector is selected according to the output of hysteresis controllers. The component of voltage vector perpendicular to the flux vector changes the electromagnetic torque and the component of voltage vector along the flux vector changes the modulus of flux vector. Table I presents the switching table of a two-leg inverter supplying a two-phase induction motor based on the approach presented in [13]. Block diagram of direct torque control of a two-phase induction motor is shown in Fig.3.

When the flux vector is near the border of a sector, the component of voltage vector perpendicular to stator flux becomes too small for reducing the torque error and so the control method fails [10]. So, a method to control the electromagnetic torque in all areas is proposed as follows.

B. *Modified DTC method using two-leg inverter*

As the electromagnetic torque control is the main aim of DTC method, the mentioned problem can be solved by specifying the areas in which the available voltage vectors can't control both the torque and the flux and then selecting a voltage vector suitable for controlling the torque. In analysis, it's assumed that the stator flux vector is located in sector1 and the angle between stator flux vector and v_1 is α. For increasing both torque and the flux, v_1 is chosen. At the first moment (t_0), the electromagnetic torque can be expressed as

$$T_e|_{t=t_0} = P\frac{L_m}{L_s' L_r'}|\lambda_s||\lambda_r'|\sin(\alpha - \theta_{r0}) \tag{14}$$

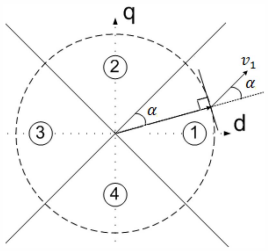

Figure 4. Increasing both flux and torque in sector 1 using two-leg inverter

According to Fig. 4, the component of v_1 which is perpendicular to flux vector rotates the flux vector. Disregarding ohmic voltage drop, the linear speed of the stator flux is

$$V_s = V_{1P} = \frac{V_{dc}}{\sqrt{2}}\sin(\alpha) \tag{15}$$

So, the angular speed of the stator flux is

$$\omega_s = \frac{V_s}{|\lambda_s|} = \frac{V_{dc}}{\sqrt{2}|\lambda_s|}\sin(\alpha) \tag{16}$$

A short time after applying v_1, the amplitude of stator flux and rotor flux don't change significantly and can be assumed to be constant. The rotor flux rotates with synchronous speed. So

$$\theta_r|_{t=t_0+\Delta t} = \theta_{r_0} + \omega_{syn}\Delta t \tag{17}$$

The position of the stator flux at the time $t = t_0 + \Delta t$ can be calculated as

$$\theta_s|_{t=t_0+\Delta t} = \alpha + \omega_s\Delta t \tag{18}$$

At the time $t = t_0 + \Delta t$, the electromagnetic torque is

$$T_e|_{t=t_0+\Delta t} = P\frac{L_m}{L_s' L_r'}|\lambda_s||\lambda_r'|\sin\left(\frac{V_{dc}}{\sqrt{2}|\lambda_s|}\sin\alpha - \omega_s\Delta t + \alpha - \theta_{r0}\right) \tag{19}$$

The controllability of electromagnetic torque requires the establishment of equation (20)

$$T_e|_{t=t_0+\Delta t} > T_e|_{t=t_0} \tag{20}$$

According to (9), (20) results in

$$\alpha \geq \sin^{-1}\left(\frac{\sqrt{2}\omega_s|\lambda_s|}{V_{dc}}\right) \tag{21}$$

Thus, for the condition in which the stator flux is in the first sector and the angle between stator flux vector and v_1 is lower than a specified value, the torque control will fail. It can be demonstrated that when the stator flux vector is at the end of any of 4 sectors and both flux and torque should be increased, the same problem occurs. Also it can be demonstrated that when the stator flux vector is at the beginning of any of 4 sectors and flux and torque should be decreased and increased respectively, the mentioned problem also occurs. The minimum angle between the flux vector and border of sectors which guarantees the control of electromagnetic torque is shown by α_0 that is

$$\alpha_0 = \sin^{-1}\left(\frac{\sqrt{2}\omega_s|\lambda_s|}{V_{dc}}\right) \tag{22}$$

In direct torque control method, $|\lambda_s|$ and V_{dc} are two specified values. Synchronous frequency also can be found by processing the waveform of voltage, current or flux. So, when the angle between the stator flux and the border of any of sectors is lower than α_0, voltage vector capable of reducing the torque error should be applied. For controlling the motor in both clockwise and counterclockwise rotations, the torque can be controlled by using a three-level hysteresis controller. In the proposed method, at each moment the stator flux is located in any of 8 sectors shown in Fig. 5.

According to the mentioned contents, the switching table for a two-phase induction motor supplied by a two-leg inverter is as illustrated in Table II.

The block diagram of modified DTC method for two- leg inverters is shown in Fig. 6. Regarding to Fig. 3, only "α_0 diagnosis" block is added that can be a simple circuit for recognition of zero-crossing of motor current or flux. The proposed method makes the torque control possible. Effectiveness of the proposed method is confirmed by simulation results.

TABLE II. SELECTION OF VOLTAGE VECTORS IN MODIFIED DTC METHOD FOR TWO-PHASE INDUCTION MOTOR FED BY TWO-LEG INVERTER

		Flux Sector							
$d\lambda$	dT	1	2	3	4	5	6	7	8
1	1	v_1	v_2	v_2	v_3	v_3	v_4	v_4	v_1
	0	v_4	v_1	v_1	v_2	v_2	v_3	v_3	v_4
	-1	v_4	v_4	v_1	v_1	v_2	v_2	v_3	v_3
0	1	v_2	v_2	v_3	v_3	v_4	v_4	v_1	v_1
	0	v_3	v_3	v_4	v_4	v_1	v_1	v_2	v_2
	-1	v_3	v_4	v_4	v_1	v_1	v_2	v_2	v_3

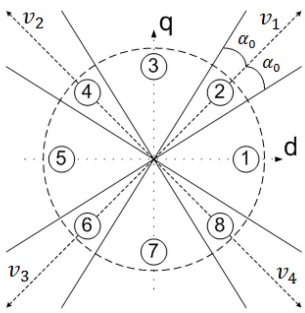

Figure 5. Proposed 8 sectors of stator flux using two-leg inverter

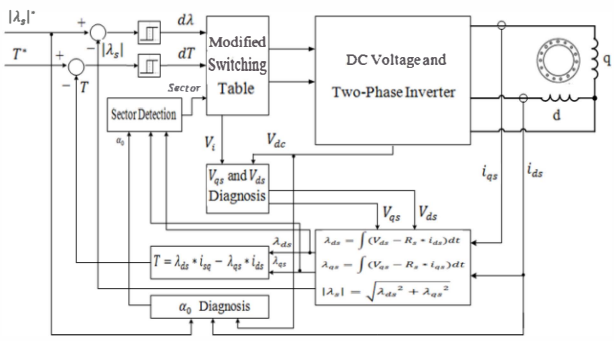

Figure 6. Block diagram of modified DTC method for two-phase induction motor

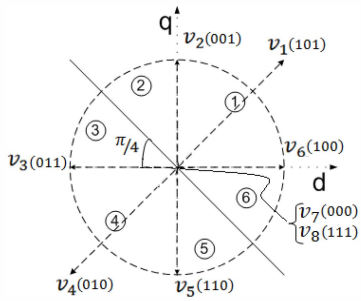

Figure 7. Voltage vectors generated by three-leg inverter and the way of specifying six sectors of the stator flux

TABLE III. SELECTION OF VOLTAGE VECTORS IN BASIC DTC METHOD FOR TWO- PHASE INDUCTION MOTOR FED BY THREE-LEG INVERTER

		Flux Sector					
$d\lambda$	dT	1	2	3	4	5	6
1	1	v_2	v_3	v_4	v_5	v_6	v_1
	0	v_7	v_8	v_7	v_8	v_7	v_8
	-1	v_6	v_1	v_2	v_3	v_4	v_5
0	1	v_3	v_4	v_5	v_6	v_1	v_2
	0	v_8	v_7	v_8	v_7	v_8	v_7
	-1	v_5	v_6	v_1	v_2	v_3	v_4

IV. DIRECT TORQUE CONTROL OF TWO-PHASE INDUCTION MOTORS FED BY THREE-LEG INVERTER

Using a three-leg inverter for controlling the two-phase induction motor obviates the need of accessing the mid-point of DC-link voltage source. In this section, first, direct torque control of two-phase induction motor based on the method presented in [13] is proposed and then, the switching table will be modified to overcome the problem of torque uncontrollability in basic method.

A. Basic DTC method using three-leg inverter

For controlling both flux and electromagnetic torque, the best approach is specifying six distinct sectors for the stator flux. The way of doing this and available voltage vectors are shown in Fig. 7.

In each of six stator flux sectors, at each sampling period the amplitude of stator flux is calculated according to (5), (6) and (7) and the electromagnetic torque is calculated from (10). The calculated values of stator flux and electromagnetic torque are compared with desired values and voltage vector is selected according to the outputs of hysteresis controllers. Table III presents the switching table of a three-leg inverter supplying a two-phase induction motor.

When the stator flux vector is in the first or fourth sector and is located near the border of the sector in which it is located, the component of voltage vector perpendicular to the stator flux becomes too small. So, it is unable to reduce the torque error and so the control method fails. Thus, a method to control the electromagnetic torque in all areas is proposed as follows.

B. Modified DTC method using three-leg inverter

The uncontrollability of torque can be solved by specifying the areas in which the available voltage vectors

can't control both the torque and the flux and selecting a voltage vector suitable for controlling the torque.

It's assumed that the sector flux vector is located in sector 1 and the angle between stator flux voltage and v_2 is β. For increasing both the torque and the flux, v_2 is chosen. Pursuing a process like the process stated in the previous section for two-leg inverters, it can be demonstrated that the establishment of equation (23) guarantees that v_2 increases the electromagnetic torque.

$$\beta \geq \sin^{-1}\left(\frac{\omega_s * |\lambda_s|}{V_{dc}}\right) \tag{23}$$

Therefore, for the condition in which the stator flux is in the third sector, when the angle between stator flux vector and v_3 is lower than a specified value, the torque control will fail. It can be shown that when the flux vector is at the end of the sixth sector and both flux and torque should be increased, the same problem exists. Also when the stator flux vector is at the beginning of third and sixth sector and the flux and torque should be decreased and increased respectively, the mentioned problem also exists. The minimum angle between the flux vectors and border of sectors which guarantees the control of electromagnetic torque is shown by β_0 which is

$$\beta_0 = \sin^{-1}\left(\frac{\omega_s * |\lambda_s|}{V_{dc}}\right) \tag{24}$$

Similar to what stated about two-phase induction motors supplied by two-leg inverters, in the case of two-phase induction motor supplied by three-leg inverter it's also possible to control the electromagnetic torque by applying a suitable voltage vector when the stator flux vector is in the first or fourth sector and angle between stator flux vector and borders of the sector is less than β_0. In the suggested method, at each moment the stator flux is located in any of 10 sectors shown in Fig. 8.

According to the stated contents, the switching table of a two-phase induction motor controlled by DTC method and supplied by a three-leg inverter, capable of controlling the electromagnetic torque while the rotor is rotating in clockwise and counter clockwise directions is shown in Table IV. The proposed switching table makes the torque control possible. Effectiveness of the proposed method is confirmed by simulation results.

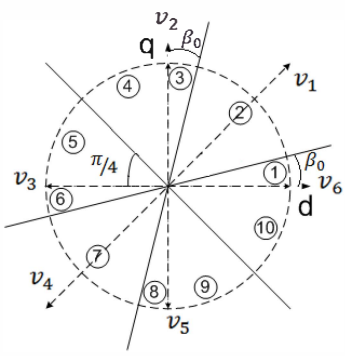

Figure 8. Proposed 10 sectors of stator flux using three-leg inverter

TABLE IV. SELECTION OF VOLTAGE VECTORS IN MODIFIED DTC METHOD OF TWO-PHASE INDUCTION MOTOR FED BY THREE-LEG INVERTER

		Flux Sector									
$d\lambda$	dT	1	2	3	4	5	6	7	8	9	10
1	1	v_2	v_2	v_3	v_3	v_4	v_5	v_5	v_6	v_6	v_1
	0	v_6	v_7	v_2	v_8	v_7	v_3	v_8	v_5	v_7	v_8
	-1	v_5	v_6	v_6	v_1	v_2	v_2	v_3	v_3	v_4	v_5
0	1	v_2	v_3	v_3	v_4	v_5	v_5	v_6	v_6	v_1	v_2
	0	v_3	v_8	v_5	v_7	v_8	v_6	v_7	v_2	v_8	v_7
	-1	v_5	v_5	v_6	v_6	v_1	v_2	v_2	v_3	v_3	v_4

V. SIMULATION RESULTS

Direct torque control drive system of a 2 KW, two-phase induction motor with the parameters mentioned in Table V is simulated by Matlab/Simulink. Both two- and three-leg inverters were utilized to control the motor and in both cases, the DC link voltage, desired torque and desired flux values are 311 V, 8 N.m and 0.84 wb, respectively.

A. Direct torque control using two-leg inverters

First, the motor is controlled using two-leg inverter and based on the switching table shown in Table I. The electromagnetic torque and stator flux waveforms are shown in Figures 9.a and 10.a, respectively. Regarding to Fig 9.a, the electromagnetic torque is not controlled properly in some areas, so the modified method is applied to improve the torque control. By processing motor current or flux waveform and determining the rotating field frequency, the value of α_0 is determined as 27^0. Then, by controlling the motor based on 8 sectors illustrated in Fig. 5 and using switching table shown in Table II, electromagnetic torque and stator flux waveforms are as shown in Figures 9.b and 10.b, respectively. The proposed method makes torque control possible without noticeable flux destruction.

TABLE V. PARAMETERS OF TWO-PHASE INDUCTION MOTOR USED IN SIMULATIONS

Parameter	Value
Stator Resistance (R_s)	2.6 (Ω)
Rotor Resistance (R'_r)	1.1 (Ω)
Stator Leakage Inductance (L_s)	0.0073 (H)
Rotor Leakage Inductance (L'_r)	0.0073 (H)
Magnetizing Inductance (L_m)	0.238 (H)

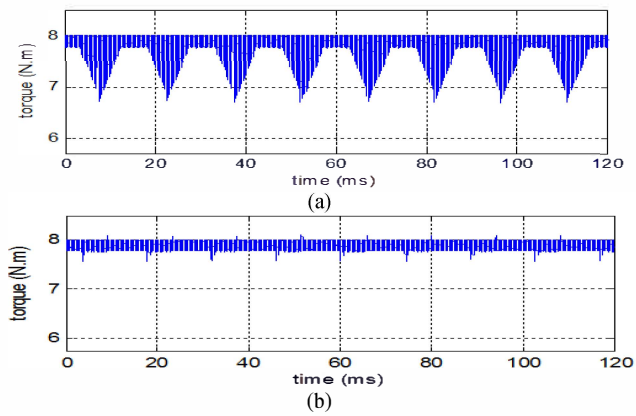

Figure 9. Electromagnetic torque waveform of two-phase induction motor fed by two-leg inverter using (a) basic method (b) modified method.

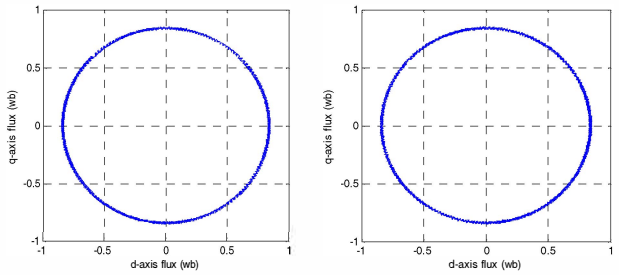

Figure 10. Flux waveform of two-phase induction motor fed by two-leg inverter using (a) basic method (b) modified method.

B. *direct torque control using three-leg inverters*

The motor is also controlled based on the switching table shown in Table III and by using a three-leg inverter. The motor electromagnetic torque and stator flux waveforms are illustrated in Figures 11.a and 12.a, respectively. Regarding to Fig. 11.a, the torque control is failed. So, the proposed method is applied to improve the torque response of drive system. The value of β_0 is determined as 29° and the motor is controlled again, based on 10 flux sectors mentioned in Fig.10 and using switching table illustrated in Table IV. The electromagnetic torque and stator flux waveforms are shown in Figures 11.b and 12.b, respectively. It can be observed that the proposed method makes torque control possible without noticeable flux control destruction.

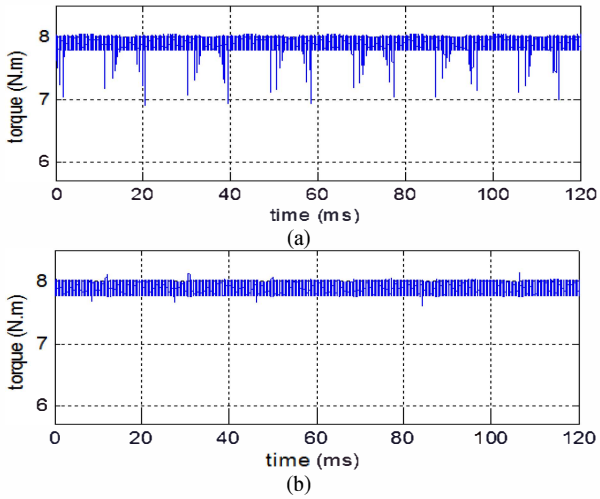

Figure 11. Electromagnetic torque waveform of two-phase induction motor fed by three-leg inverter using (a) basic method (b) modified method.

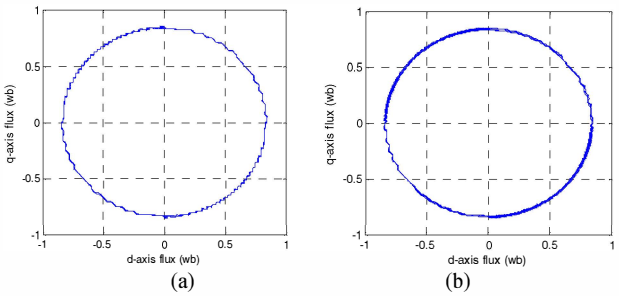

Figure 12. Flux waveform of two-phase induction motor fed by three-leg inverter using (a) basic method (b) modified method.

VI. CONCLUSION

In this paper, direct torque control of two-phase induction motor fed by two- and three-leg inverters is studied and control algorithms and switching tables are presented. Then, it's shown that in specific areas, the conventional methods are unable to control the electromagnetic torque. The areas in which the electromagnetic torque is uncontrollable are identified and methods based on modifying switching table to improve torque control in all areas are proposed. The simulation results confirm the accuracy of presented formulas for identification of problematic areas and effectiveness of proposed methods to control electromagnetic torque.

REFERENCES

[1] R.de F. Campos, L.F.R. Pinto, J. de Oliveira, A. Nied, L.C.de Marques, A.H. de Souza, "Single-Phase Induction Motor Control Based on DTC Strategies," *Industrial Electronics, 2007. IEEE International Symposium on* , vol., no., pp.1068-1073, 4-7 June 2007.

[2] Y. Sangsefidi, S. Ziaeinejad, A. Shoulaie, "Torque Ripple Reduction of BLDC Motors by Modifying the Non-commutating Phase Voltage," *Electrical, Control and Computer Engineering (INECCE), 2011 International Conference on* , vol., no., pp.308-312, 21-22 June 2011.

[3] V.S. Fating, S.V. Jadhav, R.T. Ugale, B.N. Chaudhari, "Direct Torque Control of Symmetrical and Asymmetrical Single Phase Induction Motor," *Power System Technology and IEEE Power India Conference,2008. POWERCON 2008. Joint International Conference on* , vol., no., pp.1-4, 12-15 Oct. 2008.

[4] F. Blaabjerg, F. Lungeanu, K. Skaug, M. Tonnes, "Two-Phase Induction Motor Drives," *Industry Applications Magazine, IEEE* , vol.10, no.4, pp. 24- 32, July-Aug. 2004.

[5] Chee Mun Ong, "Dynamic Simulation of Electric Machinery Using MATLAB SIMULINK," Prentice Hall, New Jersey 1998.

[6] F. Blaabjerg, F. Lungeanu, K. Skaug, M. Tonnes, "Evaluation of Low-Cost Topologies for Two Phase Induction Motor Drives, in industrial applications," *Industry Applications Conference, 2002. 37th IAS Annual Meeting. Conference Record of the* , vol.4, no., pp. 2358-2365 vol.4, 2002.

[7] S.S. Wekhande, B.N. Chaudhari, S.V. Dhopte, R.K. Sharma, "A Low Cost Inverter Drive for 2-Phase Induction Motor," *Power Electronics and Drive Systems, 1999. PEDS '99. Proceedings of the IEEE 1999 International Conference on* , vol.1, no., pp.428-431 vol.1, 1999.

[8] M.B.R. Correa, C.B. Jacobina, A.M.N. Lima, E.R.C. da Silva, "Single-phase induction motor drives systems," *Applied Power Electronics Conference and Exposition, 1999. APEC '99. Fourteenth Annual* , vol.1, no., pp.403-409 vol.1, 14-18 Mar 1999.

[9] R.de F. Campos, J.de. Oliveira, L.C.de S. Marques, A. Nied, S.I. Seleme, "SVPWM-DTC Strategy for Single-Phase Induction Motor Control," *Electric Machines & Drives Conference, 2007. IEMDC '07. IEEE International* , vol.2, no., pp.1220-1225, 3-5 May 2007.

[10] F.A.S. Neves, E.B.S. Filho, J.M.S. Cruz, R.P. Landim, Z.D. Lins, A.G.H. Accioly, "Single-Phase Induction Motor Drives with Direct Torque Control," *IECON 02 [Industrial Electronics Society, IEEE 2002 28th Annual Conference of the]* , vol.1, no., pp. 241- 246 vol.1, 5-8 Nov. 2002.

[11] M.B. de Rossiter Correa, C.B. Jacobina, E.R.C. da Silva, A.M.N. Lima, "Vector Control Strategies for Single-Phase Induction Motor Drive Systems," *Industrial Electronics, IEEE Transactions on* , vol.51, no.5, pp. 1073- 1080, Oct. 2004.

[12] P. Vas, "Sensor-less Vector and Direct Torque Control," Oxford University Press, U.K. 1998.

[13] I. Takahashi, T. Noguchi, "A New Quick-Response and High-Efficiency Control Strategy of an Induction Motor," *Industry Applications, IEEE Transactions on* , vol.IA-22, no.5, pp.820-827, Sept. 1986.